[redacted]

Lucter2

Dr : Ali Hussain

Assist. Lecturer: Mohammed Jaafar

Hardware:

Main Parts of Computer:

It consists of the following:

1. The System Unit .
2. The Motherboard.
3. The Central Processing Unit CPU .
4. Memory Unit (RAM and ROM).
5. Input Unit .
6. Output Unit .

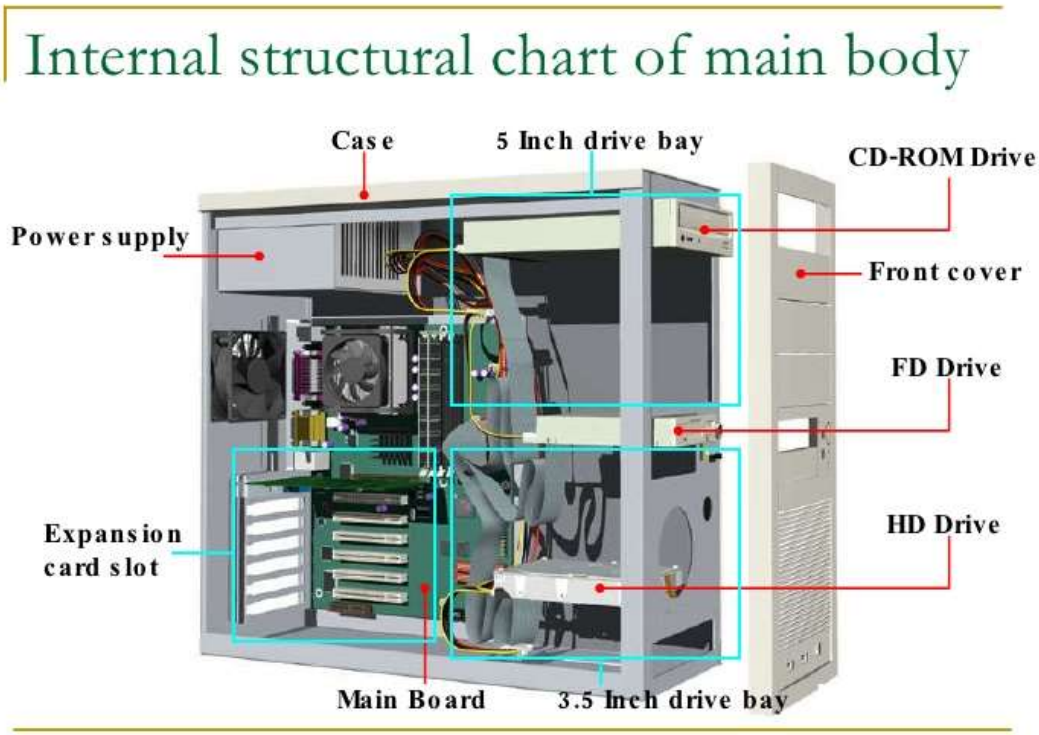

The System Unit :

This the main case where the most important parts reside inside . One of the most important parts is the Motherboard . It is an electronic board where the Central Processing Unit CPU , the main memory RAM, and the Read Only Memory ROM reside . Inside case you will also find the Hard Disk and the CD/DVD Drive . on the outside from the back you will find the ports where Input /Output devices get connected . There are two forms of the unit case : Desktop and Tower .

The Motherboard :

An electron Main board where all processing and memory unit live . Motherboards come in all shapes and sizes . but recently they are becoming smaller and smaller .

The Central Processing Unit CPU :

The CPU is the most important piece in your computer . All processed information goes through the CPU . it does all the calculations and processing . your computer speed is measured by a measuring unit called Megahertz (MHz) and these days by Gigahertz (GHz), which is actually the speed of the internal clock . A 3.0 GHz clock means that it does 3 billion cycles in one second and the CPU can do 3 billion operations in a second .

Every CPU has three main parts :

1- ***The Control Unit (CU)***
1. Which receive the instructions and send it to its destination .

2- ***The Arithmetic Logic Unit (ALU)***
2. Which processes the logical and arithmetic operations such as addition and multiplication .

3- ***Registers:*** which store very small amount of data and instructions for short period of time

Memory

Memory refers to the physical devices used to store programs or data on a temporary or permanent basis for use in a computer or other digital electronic device.

There are two general categories of memory: primary and secondary.

***1*- Primary memory**: *is the memory that is intimately associated with the actual working of the computer.*

This includes memory that holds the start-up routines as well as the current program and data it is working with.
For example : RAM, ROM
2- Secondary memory: *consists of the various devices that are able to store data and programs even when the power is off.*

For example : hard drives, floppy drives, tape drives, CD drives and DVD drives.

The Random Access Memory (RAM)

is a memory that the microprocessor uses to store data during processing. This memory is volatile (loses its contents at power-down).
When a software application is launched, the executable program is loaded from hard drive to the RAM. The microprocessor supplies address into the RAM to read instructions and data from it. RAM is needed because hard drives are too slow to operate with the speed of a microprocessor.

The Read Only Memory (ROM):

contains certain key routines (small programs). These take control of the computer when you switch on and ensure that the computer boots-up. Booting-up is the process of starting the computer up so that it is able to load and run computer programs.

Cache memory:
is very high speed memory that is used by the CPU in executing the individual instructions of the program.
It is used to hold items such as instructions that are next in line to be executed and data that is likely to be needed by the CPU.

Computer Memory Units:
Bits
In all the components of a computer, data and instructions are stored as patters of ones and zeros. These individual ones and zeros are called bits.
Bytes

A set of eight bits is called a byte. Usually a byte represents a character (alphabet, digit or symbol). A key pressed from the keyboard sends one byte of data to CPU.
Because we use very large numbers of bytes for storage, the following table is showing you a list of computer memory units:

Memory Unit	Value
Bit	**0, 1**
Byte	**8 bits (alphabet, digits, or symbol)**
Kilobyte	**1024 bytes**
Megabyte	**1024 Kilobytes**
Gigabyte	**1024 Megabytes**
Terabyte	**1024 Gigabytes**

Input Units :

These are hardware parts which are used to feed commands and data into the computer.

1- Bar code reader

A bar code reader is a device that can read and interpret bar codes and input the data into the computer.

2- Lightpen

A light pen is a device which is sensitive to variations in patterns on a surface. Light pens act like a miniature scanner and can read text as they are dragged across the printed page. This can be transferred directly to the current open document.

3-Touchpad

A touchpad is a device that senses pressure to guide the pointer on the computer screen. It is generally a small square area below the keyboard.

4- Trackball

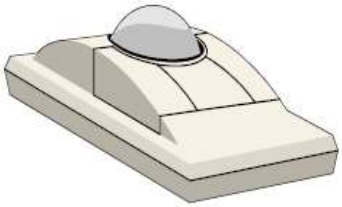

A trackball acts as a type of overturned mouse. The ball is on the top side of the object. By rolling the ball you can move the pointer across the screen. Some keyboards have an in-built trackball.

Output Unit :

These are hardware parts that the computer uses to send us the results of the processing.

1- Monitors

are the video screens used with most computers that display input as well as output.

There are two categories of screen:

✓ **CRT screens:** The cathode ray tube (CRT) type screen is usually called a monitor and makes use of the same technology as a television screen.

✓ **Solid state screens:** Solid state screens, also known as **LCD** or Liquid Crystal Displays, make use of tiny transistors to emit light and create an image.

	Dot matrix	Inkjet	Laser
Initial cost	Low	Medium	High
Cost per printed page	Low	High	Medium
Speed	Low	Medium	High
High volumes	No	No	Yes
Noise level	High	Low	Low
Print quality	Low	Medium	High
Print graphics	No	Yes	Yes
Print in colour	No	Some	Some
Print source	Ink ribbon	Ink	Toner powder

2- Printers

Printers produce a hard copy of the output on paper**.** ***There are three main types of printer:***

✓ ***Dot matrix***

✓ ***Inkjet***

✓ ***Laser.*** The following table compares the three types.

3- Speakers

Modern computers using the appropriate software can turn text in a document into audible speech. This is known as **speech synthesis**. Other types of software allow music and other sounds to be created and played back.

Input/Output Devices

A touchscreen is a special type of screen in which the screen not only displays output but also responds to being touched.
example is their use in autotellers at banks. Part of the screen contains information. Other parts may contain a menu. When you touch one of the icons on the screen, the system responds to the associated command.

Computer Performance :

There are some factors which effect the computer performance like :

1- CPU Speed.
2- RAM Size .
3- Hard Disk Size and Speed .
1- The Operating System .

1- CPU Speed:

Today computers speed is measured by a unit called Giga Hertz (GHz) . This is actually the speed of the CPU , which measured the number of operations it processes in each second . A 2.8 GHz means it processes 2.8 billion instructions per second .

2- RAM Size :

Is another factor that affects the performance of the PC .When you click on a program for execution , Windows OS loads it into memory to run ; whoever , if the program is too large to fit in the memory .

3- Hard Disk Size and Speed :

Probably , these days the size of the hard disk is becoming less of a factor when it comes to the performance of the computer ,

but the speed is a good factor because the faster hard disk is the faster to load programs into the main memory .

4- The Operating System :

The OS is not part of the hardware ;however a buggy OS and full of problems will affect the performance of the PC terribly .

Storage Devices ***(Secondary memory)***

Diskette

A diskette comprises a plastic flexible disk enclosed inside a tough plastic cover. At one end is a window. When the diskette is placed inside a diskette drive, the window is pushed to the side. The read-record head inside the drive makes contact with the magnetic disk.
Diskettes are slow and have a low capacity (1,44 Mb). Since they are cheap, they still tend to be commonly used for storing small amounts of data. Another advantage is that they can be used over and over again.

CD ROM

A CD ROM uses optical technology. When data is written, small pits are burned into the surface using a highly focussed laser beam. These are read by another laser beam.

There are two types of CD ROM used for storage.

✓ **The CD-W disks** can only be written to once. Once data has been written to part of the surface, this part can no longer be used.

✓ **CD-RW disks** are designed so that one set of data can overwrite another. This allows the disks to be re-used many times.

CD ROM provides a reliable and storage medium for backing up and storing data. The speed is greater than that of a diskette but slower than that of a hard drive.Writing to a CD ROM is a much slower process than reading it. The capacity of a CD ROM is 640 Mb. It is sometimes possible to store about 700 Mb on a disk.

DVD

The Digital Versatile Disk is a development of the storage technology of the CD ROM. Using newer storage methods and higher quality media, a DVD can store about 8 Gb of data.

Hard disk drive

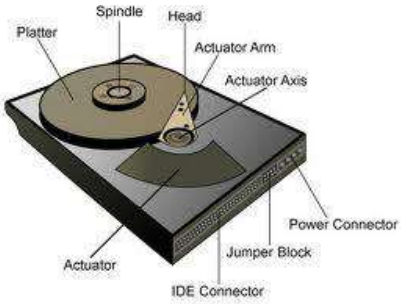

A hard drive consists of one or more magnetic platters or disks and a read arm with two electromagnetic coils for each disk. Each hard disk is divided into many sectors, each containing a certain amount of data. As of now, it is the cheapest and most common way to store a lot of data in a small space.

A hard disk drive can be **internal** or **external**. An internal drive is housed inside the main unit and is connected directly to the motherboard of the computer. An external drive is housed inside a special caddy which connects to the computer through one of its ports. Most now use the USB or firewire ports to achieve maximum performance.

Flash memory and memory sticks

A new type of external memory is the flash disk or memory stick. This is a solid state device (no moving parts) that connects to the computer via the USB port. It provides a very fast and reliable method of storing data externally.